RCPHN
Research in Community and Public Health Nursing

Original Article

pISSN 2983-0648 · eISSN 2288-4203
Res Community Public Health Nurs 2023;34(2):96-107
https://doi.org/10.12799/rcphn.2023.00052

The Prediction Model of Body Image Distortion in Korean Adolescent in the Era of COVID-19 Using Decision Tree Analysis

Myeunghee Han

Assistant professor, College of Nursing, Dongyang University, Yeongju, Korea

Purpose: Body image distortion (BID) in adolescents is a crucial problem that causes both abnormal eating habits and unhealthy weight control behaviors. COVID-19 has had a negative impact on adolescents' psychological and behavioral status, and this might influence the onset of BID in adolescents. This study aimed to develop a prediction model for BID in Korean adolescents using decision tree analysis.

Methods: The decision tree analysis was used to develop a prediction model for BID in Korean adolescents using the data of 2021 Korea Youth Risk Behavior Survey Web-based (KYRBS).

Results: In the present study, about one-third of the study subjects (31%, n=6,316) showed BID. The BID rate was higher in females (37.2%, node1) than in males (21.2%, node2). Female students with severe GAD-7 level and smartphone use on the weekend over 12h showed the highest rate of BID (66.9%). As to males, the BID rate was the highest (33.1%) among middle school male students who did strength training once a week or none.

Conclusion: In order to reduce BID, there is a need to develop a customized BID education and management programs.

Keywords: Adolescent; Body image; Decision trees

Introduction

Adolescence is an important period for body image development because of considerable physical and psychological age-related transitions occurring during this time [1]. Body image refers to a multidimensional construct incorporating how we perceive, think, feel, and act towards our bodies and the associated spectrum of health consequences [2]. Due to physical physiological, emotional, cognitive, and social changes, adolescence is more concerned with appearance [3]. Accordingly, adolescents can develop distortions in recognizing body image. Body image distortion (BID) usually refers to the perception of one's body to be fatter than it actually is [4]. Specifically, while female adolescents tend to overestimate their weight, male adolescents tend to underestimate their weight [5]. Therefore, adolescents may pursue ideals of physical attractiveness and perceive themselves be falling short of ideal [6]. A previous in adolescents found that 781.% were dissatisfied with their current body image, even though 50% of the study participants had normal BMI [7].

BID in adolescence is a problem because it causes both abnormal eating habits and unhealthy weight control behaviors [8]. Therefore, the BID in adolescents may play a pivotal role in the progress of pathogenic behaviors such as excessive dieting, exercising, and purging. These behaviors can lead to several serious diseases such as body dysmorphic disorder or eating disorder including anorexia nervosa, and bulimia nervosa [9,10]. In this context, necessary to identify the factors affecting BID that cause these serious physical and mental problems.

Received: January 31, 2023; **Revised:** March 12, 2023; **Accepted:** April 6, 2023
Corresponding author: Myeunghee Han
College of Nursing, Dongyang University, 145 Dongyangdae-ro, Yeongju-si, 36040, Korea
Tel: +82-54-630-1279 E-mail: dewdrop54@daum.net

© 2023 Korean Academy of Community Health Nursing
This is an Open Access article distributed under the terms of the Creative Commons Attribution NoDerivs License (http://creativecommons.org/licenses/by-nd/4.0) which allows readers to disseminate and reuse the article, as well as share and reuse the scientific material. It does not permit the creation of derivative works without specific permission.

Previous studies found that BID of adolescents is influenced by socio-demographic or environmental factors including gender, body mass index (BMI), socioeconomic status (SES), and media exposure. Emphasizing the role of print media, television, and Internet trends as sources of promoting unrealistic and so-called ideal images to adolescents, Perloff called for further study of the Internet, social media, and their effects on adolescent body image [11]. In addition, it was found that there was a relationship between BID and emotional status such as anxiety or depression. According to Jackson and Chen, sociocultural factors including pressure or stress from family, peers, and media may prominent effects on a range of BID [12]. In summary, factors such as social, physical, and psychological changes of adolescents aged between 12 and 18 years are related to BID.

Coronavirus disease (COVID-19) caused drastic and sudden changes in the way we organize ourselves as social human beings [13]. Among other things, COVID-19 has disrupted and changed adolescents' lives by social distancing, interrupting of typical school routines [14]. The COVID-19 has had a negative impact on adolescents' psychological and behavioral status. There is evidence about significant increases in rate of depression, anxiety, loneliness, and suicide attempts [15]. Furthermore, the lifestyles of adolescents changed, leading to increased media usage time, sugar intake, and sedentary time [16]. One of the previous studies reported that adolescents significantly increased their average daily smartphone uses. This can increase the likelihood of adolescents' exposure to social media or video over the Internet [17]. These rapid psychological, behavioral, social, and environmental changes caused by COVID-19 can adversely affect the severity of BID in adolescents [18]. However, little is known about the factors that can predict BID in adolescents in the era of COVID-19 [19].

To bridge this gap, the present study aimed to develop a prediction model for BID in Korean adolescents using decision tree analysis, which is a well-known useful statistical method to analyze all interaction effects of multiple variables.

Methods

Study Design

This study was a cross-sectional survey study using the 2021 Korea Youth Risk Behavior Survey Web-based (KYRBS).

Study Participants

The KYRBS is conducted annually by the Ministry of Education and the Korea Centers for Disease Control and Prevention (KCDC). In this study, raw data were used after receiving the official approval for use from the KYRBS website. We used the 17th (2021) KYRBS collected from August 30 to November 11, 2021. The KYRBS was designed to represent middle and high school students nationwide using the stratified sample collection method, and students with a long absence, children with disabilities, and students with literacy disabilities were excluded from the sample. The total number of respondents in the 2021 KYRBS was 54,848. The sample as divided into two groups: the distortion group and the non-distortion group. Among the 21,444 people who perceived themselves to be overweight or obese, 6,316 adolescents who actually had normal or underweight in Body Mass Index (BMI, kg/m^2) were defined as the distortion group. In addition, 14,006 adolescents who actually had normal BMI while recognizing that they were of normal weight were defined as the non-distortion group.

Ethics Statement

This study was performed in line with the guidelines of declaration of Helsinki. In addition, approval was granted by the Institutional Review Board of author's affiliation (IRB No. 1041495-202206-HR-01-01).

Measures

Socio-demographic characteristics

The variables collected in this study included socio-demographic factors of age (years), sex (female or male), residence type (living with family/relatives/alone, dormitory, childcare facility), economic condition (high, medium-high, medium, medium-low, low), changes in economic status due to COVID-19 (strongly agree, agree, disagree, strongly disagree), financial aid (no, yes), academic performance (high, medium-high, medium, medium-low, low), stress level (never, little, some, high), subject health status (very unhealthy, unhealthy, average, healthy, very healthy), subjective body shape perception (normal, fat, very fat), BMI (kg/m^2) (underweight, normal), nationality of father and mother (Korean) (no, yes), education level of father and mother (under middle school, high school, over university), sleeping time, time of using smartphone during weekdays/weekend (minutes).

Emotional status

Emotional status included the variables of anxiety (normal, low, medium, severe), sadness and despair (no, yes), loneliness (no, yes), suicidal thoughts (no, yes), suicide plan (no, yes), suicide attempt (no, yes). Anxiety level was measured using general anxiety disorder-7 (GAD-7) [20].

Health related behaviors

This study included factors related to health-related behaviors, including frequency of breakfast (mean value), frequency of fruit consumption (none, 1-2/week, 3-4/week, 5-6/week, 1/day, 2/day, over 3/day), frequency of soda consumption (none, 1-2/week, 3-4/week, 5-6week, 1/day, over 3/day), frequency of sweet beverage consumption (none, 1-2/week, 3-4/week, 5-6/week, 1/day, 2/day, over 3/day), frequency of fast-food consumption (none, 1-2/week, 3-4/week, 5-6week, 1/day, over 3/day), frequency of water consumption (< 1/day, 1-2cups/day, 3cups/day, 4 cups/day, over 5 cups/day). The variables of days of physical activity over 60 minutes, days of strenuous physical activity, days of strength training, sitting time for studying or non-studying were presented as mean values. For the variables of drinking (no, yes), days of drinking (months) (none, 1-2 days, 3-5 days, 6-9 days, 10-19 days, 20-29 days, daily), amount of drinking (1-2 cups, 3-4 cups, 5-6 cups, 1-2 bottles, over 2 bottles), smoking (no, yes), days of smoking cigarettes (none, 1-2days, 3-5days, 6-9days, 10-19days, 20-29days, daily), amount of smoking cigarettes (< 1, 1, 2-5, 6-9, 10-19, > 20) were also included in this study.

Statistical Methods

Statistical analyses were performed with SPSS (Version 28.0, SPSS Inc., Chicago) for Windows. Frequencies (percentages) and mean (standard deviations, SD) were used to analyze the general characteristics, diet, and physical activity of the study participants. Chi-square tests and independent t-tests were run to compare between two groups. To predict BID, a decision tree method was used. In the field of machine learning, data mining, and medicine, decision tree is an useful and popular way to build prediction models by splitting large data into smaller subgroups progressively [21]. The detailed procedure of decision tree is iterative at each branch of the tree, and the independent factors that show the most significant association with the outcome variable are selected step by step by employing a certain criterion [22,23]. In addition, decision tree analysis has the advantage that the analysts can easily understand the process and that it has higher explanatory power than other statistical methodologies such as regression, artificial neural network, and discriminant analysis [24]. This is because the classification and prediction process is expressed by induction rule in a method similar to tree structure [24]. In this study, we employed Chi-squared Automatic Interaction Detection (CHAID) that can predict both continuous and dichotomous target variables to split the criteria in the decision tree. The CHAID can make a classification tree constructed by repeatedly splitting subsets into over two build nodes, beginning from the entire data set [24]. The stopping rule for maximum tree depth is the value of 3, and the minimum numbers of cases for parent and child nodes are 100 and 50, respectively.

To identify validity of the decision tree, split-sample validation analysis was performed. For split-sample validation, the total sample was divided into training data (70% of total sample) and testing data (30% of total sample). The generalizability of the BID prediction model generated using the training data was compared with the prediction model formed through the test data to confirm generalizability. Generalization of training data can be assumed if there is no difference in risk estimates of the model between training data and testing data [23].

Results

General Characteristics

In this study, the data from a total of 20,322 participants were used. All subjects were divided into two groups according to whether or not they showed BID. Those who did not show BID were included in the non-distortion group (n = 14,006, 68.9%), and those who showed BID were included in the distortion group (n = 6,316, 31.1%). The mean age of all study participants was 15.05 (years old), and over a half of participants is female (n = 12,527, 61.6%). As shown in Table 1, significant differences between two groups were found in the following variables: age ($p < .001$), sex ($p < .001$), residence type ($p = .004$), economic condition ($p < .001$), financial aid ($p < .001$), academic performance ($p < .001$), stress level ($p < .001$), subject health status ($p < .001$), subjective body shape perception ($p < .001$), BMI ($p < .001$), mother nationality ($p = .025$), education level of mother ($p = .009$), sleeping time ($p = .014$), time of using smartphone during weekdays ($p < .001$), and on the weekend ($p < .001$).

Difference of emotional status between distortion and non-distortion groups

For the variable of GAD-7, the distortion group showed a higher rate of medium or high level than non-distortion group ($p < .001$). The distortion group showed higher rate of sadness and despair ($p < .001$), loneliness ($p < .001$), suicidal thought ($p < .001$), suicide plan ($p < .001$), and suicide attempt ($p < .001$) than the non-distortion group (Table 2).

Differences of health related behaviors between distortion and non-distortion groups

We observed a significant difference in the frequency of break-

Table 1. General Characteristics

Characteristics	Categories	Total (n = 20,322)	Body Image Distortion		*p*-value
			Non-distortion group (n = 14,006, 68.92%)	Distortion group (n = 6316, 31.08%)	
		N (%) or M ± SD	N (%) or M ± SD	N (%) or M ± SD	
Age		15.05 ± 1.73	15.14 ± 1.72	14.84 ± 1.75	< .001
Sex	Male	7,795 (38.4)	6,145 (43.9)	1,650 (26.1)	< .001
	Female	12,527 (61.6)	7,861 (56.1)	4,666 (73.9)	
Residence type	Living with family	19,483 (95.9)	13,383 (95.6)	6,100 (96.6)	.004
	Living with relatives	90 (0.4)	63 (0.4)	27 (0.4)	
	Live alone	86 (0.4)	58 (1.4)	28 (0.4)	
	Dormitory	608 (3.0)	462 (3.3)	146 (2.3)	
	Childcare facility	55 (0.3)	40 (0.3)	15 (0.2)	
Economic condition	High	2,071 (10.2)	1,501 (10.7)	570 (9.0)	< .001
	Medium-high	5,816 (28.6)	4,058 (29.0)	1,758 (27.8)	
	Medium	10,355 (51.0)	7,179 (51.3)	3,176 (50.3)	
	Medium-low	1,745 (8.6)	1,070 (7.6)	675 (10.7)	
	Low	335 (1.6)	198 (1.4)	137 (2.2)	
Changes in economic status due to COVID-19	Strongly agree	1,042 (5.1)	650 (4.6)	392 (6.2)	< .001
	Agree	4,970 (24.5)	3,307 (23.6)	1,663 (26.3)	
	Disagree	8,385 (41.3)	5,770 (41.2)	215 (41.4)	
	Strongly disagree	5,925 (29.2)	4,279 (30.6)	1,646 (26.1)	
Financial aids	No	1,871 (92.1)	12,967 (92.6)	5,746 (91.0)	< .001
	Yes	1,609(7.9)	1,039(7.4)	570(9.0)	
Academic performance	High	2,562 (12.6)	1,838 (13.1)	724 (11.5)	< .001
	Medium-high	5,162 (25.4)	3,616 (25.8)	1,546 (24.5)	
	Medium	6,542 (32.2)	4,653 (33.2)	1,889 (29.9)	
	Medium-low	4,280 (21.1)	2,798 (20.0)	1482 (23.5)	
	Low	1,776 (8.7)	1,101 (7.9)	675 (10.7)	
Stress level	Never	611 (3.0)	498 (3.6)	113 (1.8)	< .001
	Little	3,041 (15.0)	2,305 (16.5)	736 (11.7)	
	Some	8,652 (42.6)	6,159 (44.0)	2,493 (39.5)	
	High	5,788 (28.5)	3,730 (26.6)	2,058 (32.6)	
	Very high	2,230 (11.0)	1,314 (9.4)	916 (14.5)	
Subject health status	Very unhealthy	78 (0.4)	30 (0.2)	48 (0.8)	< .001
	Unhealthy	1,424 (7.0)	834 (6.0)	590 (9.3)	
	Average	5,005 (24.6)	3,010 (21.5)	199 (31.6)	
	Healthy	8,925 (43.9)	6,207 (44.3)	2,718 (43.0)	
	Very Healthy	4,890 (24.1)	3,925 (28.0)	65 (15.3)	
Subjective body shape perception	Normal	14,006 (68.9)	14,406 (100.0)	0 (0.0)	< .001
	Fat	6,146 (30.2)	0 (0.0)	6,146 (97.3)	
	Very Fat	170 (0.8)	0 (0.0)	170 (2.7)	
Body Mass Index(BMI, kg/m^2)	Underweight	205 (1.0)	0 (0.0)	205 (3.2)	
	Normal	20,117 (99.0)	14,006 (100.0)	6,111 (96.8)	< .001
Father nationality (Korean)	No	69 (0.5)	10,257 (99.6)	4,774 (99.4)	.195
	Yes	15,031 (99.5)	42 (0.4)	27 (0.6)	
Education level of father	Under middle school graduates	185 (1.2)	117 (1.1)	68 (1.4)	.217
	High school graduates	3,204 (21.2)	2,173 (21.1)	1,031 (21.5)	
	Over university graduate	8,924 (59.1)	6,133 (59.5)	2,791 (58.1)	
	Don't know	2,787 (18.5)	1,876 (18.2)	911 (19.0)	

(Continued to the next page)

Table 1. Continued

Characteristics	Categories	Total (n = 20,322)	Body Image Distortion		*p*-value
			Non-distortion group (n = 14,006, 68.92%)	Distortion group (n = 6316, 31.08%)	
		N (%) or M ± SD	N (%) or M ± SD	N (%) or M ± SD	
Mother nationality (Korean)	No	380 (2.5)	10,121 (97.7)	4733 (97.1)	.025
	Yes	14,854 (97.5)	238 (2.3)	142 (2.9)	
Education level of mother	Under middle school graduates	160 (1.1)	95 (0.9)	65 (1.3)	.009
	High school graduates	3,871 (2.4)	2,586 (2.0)	1,285 (26.4)	
	Over university graduate	8,756 (57.5)	6,030 (58.2)	2,726 (55.9)	
	Don't know	2,447 (16.1)	1,648 (15.9)	799 (16.4)	
Sleeping time		6.12 ± 1.43	6.14 ± 1.42	6.08 ± 1.44	.014
Time of using smartphone during weekdays (minutes)		287.25 ± 185.08	279.98 ± 180.73	303.24 ± 193.38	< .001
Time of using smartphone during weekend (minutes)		409.15 ± 237.68	397.83 ± 231.19	434.02 ± 249.57	< .001

Table 2. Emotional status

Characteristics	Categories	Total (n = 20,322)	Body Image Distortion		*p*-value
			Non-distortion group (n = 14,006, 68.92%)	Distortion group (n = 6316, 31.08%)	
		N (%) or M ± SD	N (%) or M ± SD	N (%) or M ± SD	
General Anxiety Disorder-7 (GAD-7)	Normal	13,022 (64.1)	9,501 (67.8)	3,521 (55.7)	< .001
	Low	4,777 (23.5)	3,032 (21.6)	1,745 (27.6)	
	Medium	1,675 (8.2)	1,022 (7.3)	653 (10.3)	
	Severe	848 (4.2)	451 (3.2)	397 (6.3)	
Sadness & Despair	No	14,737 (72.5)	10,479 (74.8)	4,258 (67.4)	< .001
	Yes	5,585 (27.5)	3,527 (25.2)	2,058 (32.6)	
Loneliness	No		3,131 (22.4)	1,038 (16.4)	< .001
	Yes		10,875 (77.6)	528 (83.6)	
Suicidal thoughts	No	17,717 (87.2)	12,459 (89.0)	5,258 (83.2)	< .001
	Yes	260 (12.8)	1,547 (11.0)	41,058 (16.8)	
Suicide plan	No	19,516 (96.0)	13,524 (96.6)	5,992 (94.9)	< .001
	Yes	806 (4.0)	482 (3.4)	324 (40.2)	
Suicide attempt	No	19,839 (97.6)	13,722 (98.0)	6,117 (96.8)	< .001
	Yes	483 (2.4)	284 (2.0)	199 (3.2)	

fast between the non-distortion (4.75 ± 2.73) and the distortion groups (4.62 ± 2.68) (p = .001). In the frequency of fruit and soda consumption variables, both groups showed the highest frequency of 3-4 times a week and 1-2 times in a week, respectively (p < .001). For the frequency of fast-food and water consumption variables, both groups showed the highest frequency of 1-2 times in a week and over 5 cups in a day, respectively (p < .001). For the physical activity parts, two groups showed significant differences in the variables of days of physical activity over 60 minutes (p < .001), strenuous physical activity (p < .001), strength training (p < .001). In addition, the distortion group showed a significantly higher time of sitting time for non-studying (162.84 ± 2.07) than differences in variables of sitting time for non-studying (151.24 ± 1.29) (p < .001). In addition, there were significant differences in variables of drinking (p = .004), amount of drinking (p = .036), smoking (p = .002) (Table 3).

Prediction model for body image distortion

The prediction model with 20 nodes of this study is shown in Figure 1. As can be seen in the classification tree, about 31.1%

Table 3. Health related behaviors

Characteristics	Categories	Total (n = 20,322)	Body Image Distortion		*p*-value
			Non-distortion group (n = 14,006, 68.92%)	Distortion group (n = 6316, 31.08%)	
		N (%) or M ± SD	N (%) or M ± SD	N (%) or M ± SD	
Frequency of breakfast		4.71 ± 2.72	4.75 ± 2.73	4.62 ± 2.68	.001
Frequency of fruit consumption	None	2,318 (11.4)	1,551 (11.1)	767 (12.1)	< .001
	1-2/week	6,510 (32.0)	4,420 (31.6)	2,090 (33.1)	
	3-4/week	5,710 (28.1)	3,915 (28.0)	1,795 (28.4)	
	5-6/week	2,109 (10.4)	1,483 (10.6)	626 (9.9)	
	1/day	2,235 (11.0)	1,615 (11.5)	620 (9.8)	
	2/day	961 (4.7)	684 (4.9)	277 (4.4)	
	Over 3/day	479 (2.4)	338 (2.4)	141 (29.4)	
Frequency of soda consumption	None	5,297 (26.1)	3,542 (25.3)	1,755 (27.8)	< .001
	1-2/week	8,694 (42.8)	6,027 (43.0)	2,667 (42.2)	
	3-4/week	4,065 (20.0)	2,820 (20.1)	1,245 (19.7)0	
	5-6/week	1,130 (5.6)	823 (5.9)	307 (4.9)	
	1/day	639 (3.1)	468 (3.3)	171 (2.7)	
	2/day	269 (1.3)	117 (1.3)	90 (1.4)	
	Over 3/day	228 (1.1)	147 (1.0)	81 (1.3)	
Frequency of sweet beverage consumption	None	3,200 (15.7)	2,179 (15.6)	1,021 (16.2)	.126
	1-2/week	7,650 (37.6)	5,298 (37.8)	2,352 (37.2)	
	3-4/week	5,431 (26.7)	3,711 (26.5)	1,720 (27.2)	
	5-6/week	2,026 (10.0)	1,395 (10.0)	631 (10.0)	
	1/day	1,265 (6.2)	915 (6.5)	350 (5.5)	
	2/day	438 (2.2)	300 (2.1)	138 (2.2)	
	Over 3/day	312 (1.5)	208 (1.5)	104 (1.6)	
Frequency of fast-food consumption	None	3,495 (17.2)	2,385 (17.0)	1,110 (17.6)	.016
	1-2/week	11,841 (58.3)	8,239 (58.8)	3,602 (57.0)	
	3-4/week	3,985 (19.6)	2,720 (19.4)	1,265 (20.0)	
	5-6/week	672 (3.3)	459 (3.3)	213 (3.4)	
	1/day	224 (1.1)	136 (1.0)	88 (1.4)	
	2/day	56 (0.3)	40 (0.3)	16 (0.3)	
	Over 3/day	49 (0.2)	27 (0.2)	22 (0.3)	
Frequency of water consumption	< 1/day	799 (3.9)	514 (3.7)	285 (4.5)	< .001
	1-2cups/day	3,903 (19.2)	2,633 (18.8)	1,270 (20.1)	
	3 cups/day	4,823 (23.7)	3,318 (23.7)	1,505 (23.8)	
	4 cups/day	3,654 (18.0)	2,480 (17.7)	1,174 (18.6)	
	Over 5 cups/day	7,143 (35.1)	5,061 (36.1)	2,082 (33.0)	
Days physical activity over 60 minutes		2.99 ± 2.09	3.12 ± 2.15	2.72 ± 1.91	.001
Days strenuous physical activity		2.75 ± 1.74	2.86 ± 1.78	2.50 ± 1.60	< .001
Days of strength training		2.25 ± 1.71	2.40 ± 1.80	1.91 ± 1.44	< .001
Sitting time for studying		464.86 ± 234.16	462.72 ± 234.45	469.63 ± 233.46	.054
Sitting time for non-studying		206.10 ± 155.03	151.24 ± 1.29	162.84 ± 2.07	< .001
Drinking	No	13,980 (68.8)	9,548 (68.2)	4,432 (70.2)	.004
	Yes	6,342 (31.2)	4,458 (31.8)	1,884 (29.8)	

(Continued to the next page)

Table 3. Continued

Characteristics	Categories	Total (n = 20,322)	Body Image Distortion		*p*-value
			Non-distortion group (n = 14,006, 68.92%)	Distortion group (n = 6316, 31.08%)	
		N (%) or M ± SD	N (%) or M ± SD	N (%) or M ± SD	
Days of drinking	None	4,342 (68.5)	3,042 (68.2)	1,300 (69.0)	.608
	1-2 days	1,255 (19.8)	886 (19.9)	369 (19.6)	
	3-5 days	351 (5.5)	248 (5.6)	103 (5.5)	
	6-9 days	201 (3.2)	146 (3.3)	55 (2.9)	
	10-19 days	119 (1.9)	87 (2.0)	32 (1.7)	
	20-29 days	57 (0.9)	35 (0.8)	22 (1.2)	
	Daily	17 (0.3)	14 (0.3)	3 (0.2)	
Amount of drinking	1-2cups	906 (45.3)	622 (43.9)	284 (48.6)	.036
	3-4cups	351 (17.5)	241 (17.0)	110 (18.8)	
	5-6cups	177 (8.9)	131 (9.3)	46 (7.9)	
	1-2bottles	392 (19.6)	284 (20.1)	108 (18.5)	
	Over 2 bottles	174 (8.7)	138 (9.7)	36 (6.2)	
Smoking	No	18,568 (91.4)	12,739 (91.0)	5,829 (92.3)	.002
	Yes	1,754 (8.6)	1,267 (9.0)	487 (7.7)	
Days of smoking cigarettes	None	973 (55.5)	698 (55.1)	275 (56.5)	.109
	1-2 days	147 (8.4)	107 (8.4)	40 (8.2)	
	3-5 days	74 (4.2)	53 (4.2)	21 (4.3)	
	6-9 days	49 (2.8)	32 (2.5)	17 (3.)	
	10-19 days	73 (4.2)	47 (3.7)	26 (5.3)	
	20-29 days	71 (4.0)	46 (3.6)	25 (5.1)	
	Daily	367 (20.9)	284 (22.4)	83 (17.0)	
Amount of smoking cigarettes	< 1	131 (16.8)	88 (15.5)	43 (20.3)	.403
	1	61 (7.8)	45 (7.9)	16 (7.5)	
	44,962	275 (35.2)	196 (34.4)	79 (37.3)	
	45,086	252 (19.5)	117 (20.6)	35 (16.5)	
	45,218	117 (15.0)	87 (15.3)	30 (14.2)	
	> 20	45 (5.8)	36 (6.3)	9 (4.2)	

showed BID. The variable of sex was the primary factor predicting BID in adolescents (chi-square = 580.00, $p < .001$). The rate of BID was 37.2% in females (node1), and 21.2% in males (node 2). The rate of BID in female differed according to GAD-7 (chi-square = 150.00, $p < .001$). Of female students with a severe group in GAD-7 (node 3), 51.5% showed BID, while 33.1% in the normal group for GAD-7 (node 4) showed BID. The rate of BID among those in the severe GAD-7 group was different according to time of using smartphone during weekend (chi-square = 14.28, $p = .003$). The rate of BID of females in severe GAD-7 group with over 720 minutes (12h) using a smartphone on weekend (node 8) was 66.9%, which was the highest rate.

The rate of BID in male students differed according to level of school (chi-square = 209.00, $p < .001$). The rate of BID among male students in middle school was 26.6% (node 6), while that among students in high school was 12.9% (node 7). The rate of BID among those in middle school differed according to the number of days of strength training (chi-square = 97.59, $p < .001$). The rate of BID among middle school male students with strength training none or once a week was 33.1% (node 15). The rate of BID of high school male students with no strength training in a week was 18.9% (node 18).

Validity testing of the prediction model for body image distortion

In order to verify generalization of the prediction model for BID, validity testing for training data was conducted. The validity testing of training data through testing data indicated that the risk

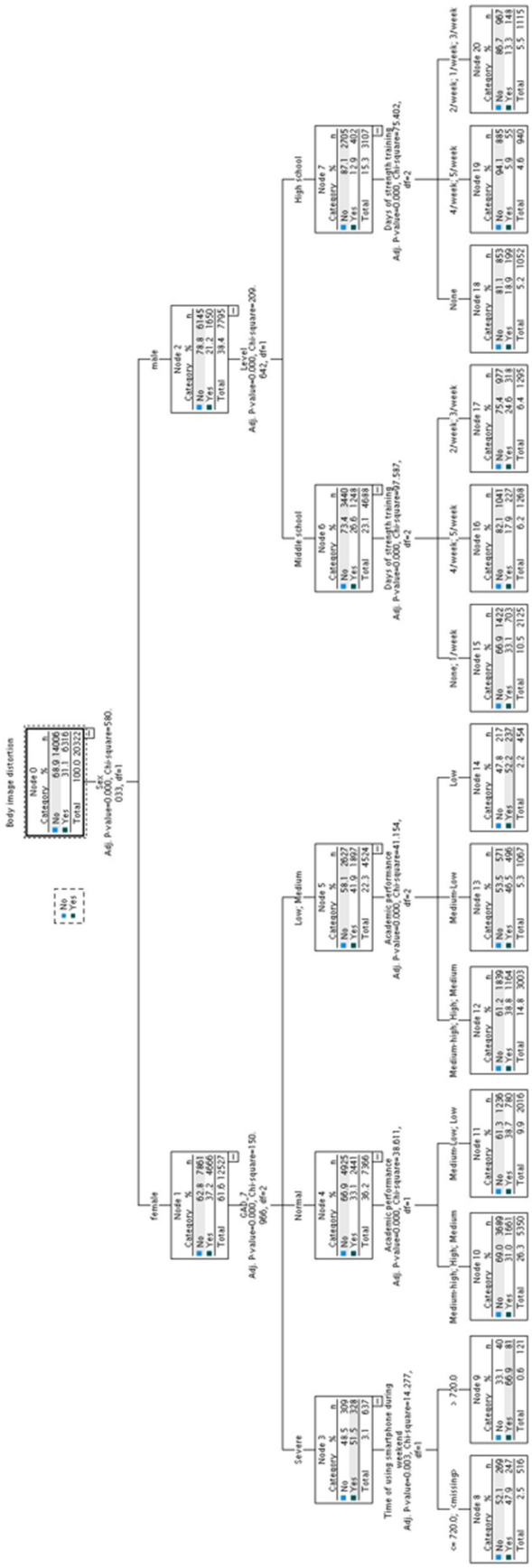

Figure 1. Decision tree of body image distortion by chi-square automatic interaction detection algorithm.

estimate of testing sample was .31, and it was not significantly different from the risk estimate (.31) of the training data. As can be seen in the risk chart, the value of risk estimate was identified to be .31 in the training data, and the classification accuracy can be confirmed to be about 68.7%. Therefore, can be assumed that the prediction model for the BID prediction model generated in the present study has a high generalizability (Table 4).

Discussion

This study was conducted to predict BID among adolescents using the decision tree analysis. The results revealed that about one-third of the study participants (31%, n = 6,316) showed BID. Similarly, a previous study conducted with 2,117 adolescent found almost 50% showed BID [25]. Furthermore, a study conducted on domestic adolescents found that only 58.8% of male students and 64.1% of female students accurately recognized their actual body shape [26]. However, in a study conducted among 9,714 normal weight American students, the rate of BID was 16.2% [27]. Comparing these outcomes with the results of the present study, it was confirmed that the BID ratio of the results of this study was quite high. Despite some differences between previously reported results and those reported in the present study, we can conclude that BID in adolescence is a serious problem that cannot be overlooked.

From the decision tree, the variable of sex was found to be the primary factor predicting BID in adolescents. The BID rate was higher in female (37.2%, node1) than male (21.2%, node2) study participants. This result is consistent with studies conducted prior to COVID-19 [28-30]. In specific, a study reported that 50.5% of all students, 39.9% of male students, and 61.4% of female students, showed BID [31]. Although the BID rate is different for each study, it was found that female students showed higher rate of BID than male students regardless of COVID-19. However, a survey found that the most difficulty of students during COVID-19 was physical changes including weight gain, and this was especially noticeable in female students [31]. Based on this result, it can be assumed that BID in female students has become more serious problem due to the COVID-19. However, further studies should be conducted to identify the impact of

Table 4. Risk Chart of Decision Trees

Variables	Risk estimate	SE
Training data	.31	.01
Test data	.31	.01

COVID-19 on sex-specific BID differences.

Although it is not identified in the COVID-19, there are several suggested reasons for higher BID in female students than in male students. A previous study insisted that females tend to harbor a more negative body image easily than men for the reason of high BID in female [30]. Also, it is reported that females are often judged for their appearance against strict and pervasive norms of ideal appearance [28,32]. This situation makes female students feel pressure to achieve a more ideal appearance, which can potentially lead to a negative body image of them [32]. In addition, a previous study suggested that there is a social culture that discriminates based on female appearance [33]. Another study stated that female students more sensitively responded to other or social evaluations than to their won subjective evaluations of their body image, so BID appeared at a higher rate among female rather than among male students [34]. Of note, females with a low BMI may experience complications such as amenorrhea, infertility, and low birth weight. In particular, it can be worse during COVID-19, more attention should be paid to the distortion of the body image of normal or underweight female students.

In this study, females showing severe GAD-7 level and using smartphone on weekend over 12h showed the highest rate of BID. This result is largely consistent with the results of a previous study that found a significant relationship between time of using smartphone and BID. The authors also found that anxiety related to BID and smartphone dependence [35]. In addition, the results of this study are consistent with the results of a study that reported that anxiety plays a mediating role in BID and smartphone use [36]. During COVID-19 pandemic, female students considered that body weight gain, increased media use time, and stress as the biggest difficulties [37]. As the use of smartphones increased due to COVID-19 dramatically [38], physical activity decreased and weight increased, but as exposure time to media increased, anxiety due to stress increased, making BID more serious. In order to reduce the BID rate in female students, it is necessary to develop relevant management and prevention programs that consider the anxiety level and time of smartphone use. Due to the COVID-19, there is a possibility that female students' anxiety and smartphone use have increased, which may have adversely affected changes in their BID. Therefore, continuous counseling and observation are also necessary.

The rate of BID among middle school male students with strength training none or once a week was 33.1% (node 15). However, contrary to our findings, a previous study—although it included participants of both genders—found that the rate of BID was higher among high school students than among middle school students [25]. A previous study found that appropriate physical activity in adolescence helps to reduce depression, stress, and suicidal thoughts along with positive effects on growth and development [39]. Since male students tend to be more physically active than female students, it can be assumed that the lack of strength training affected the high rate of BID in male students. Actually, it was difficult to compare these results with previous studies due to the lack of research about male students' BID. Yet, since interest in the body image has surged among male students, further research on this topic is needed. Poor body image can adversely affect physical and psychological health and influence self-esteem, mood, competence, as well as social and occupational functioning [40]. Therefore, further research on BID among adolescents would be needed to set the healthy body image and to prevent various illness.

Strengths and limitations

To the best of our knowledge, this study is the first to develop a prediction model of body image distortion among adolescents in the COVID-19 pandemic time. Although men's interest in body shape is increasing, previous studies related to appearance and BID have been mainly conducted on female students. However, this study is more meaningful in that it also included male students. Our results can serve as fundamental data for the development of education or management programs that support to form a healthy body image of adolescents. However, there are several limitations that should be considered in further studies. First, this study might not have included all factors related to body image distortion, such as quality of life, depression, relationship of friends, or underlying disease in adolescents. Second, the data used in this study were collected by self-reporting; therefore, the level reliability of data might be somewhat low. Third, this study did not compare the factors related to BID before and after the COVID-19. Forth, since no study has been conducted to identify factors that predict BID in students in the era of COVID-19, it is difficult to compare the differences of factors found in results. For that reason, it is difficult to conclude that the factors identified in this study significantly affect adolescent BID only in the era of COVID-19. Finally, although the data used in this study were collected during the COVID-19, it cannot be assumed that characteristics of the subjects fully reflected the situation of COVID-19.

Conclusion

The results of the present study confirmed that BID has a high

prevalence rate among adolescents. The BID is affected by the variable of sex. Female students showed a higher rate of BID than male students. Female students with a severe level of anxiety and using smartphone during weekend over 12 hours showed the highest rate of BDI. The highest rate of BID among male study participants was observed among students attending middle school and those you did not do strength training or did it once a week. From the results of this study, the factors related to BID were not significantly different from those found in studies before COVID-19. However, even for the same factors, smartphone use, anxiety, and physical activity were significantly affected by COVID-19, which is likely to have influenced BID changes. However, since this study is a cross-sectional study that reflects only a temporary situation, in order to generalize to study, it is necessary to conduct the study by expanding the scope of subjects in the era of infectious diseases such as COVID-19 in the future. In addition, a longitudinal study is needed to explore changes in BID reflecting changes in circumstances and to identify factors influencing changes.

ORCID

Myeunghee Han, https://orcid.org/0000-0002-7039-5242

Conflict of interest

The authors declared no conflict of interest.

Funding

None.

Authors' contributions

Han, Myeunghee contributed to conceptualization, data curation, formal analysis, methodology, visualization, writing - original draft, review & editing, investigation, resources, software, supervision, and validation.

Data availability

Please contact the corresponding author for data availability.

Acknowledgments

None.

References

1. Voelker D, Reel J, Greenleaf C. Weight status and body image perceptions in adolescents: Current perspectives. Adolescent Health, Medicine and Therapeutics. 2015;6:149-158. https://doi.org/10.2147/ahmt.s68344
2. Markey CN. Invited Commentary: Why body image is important to adolescent development. Journal of Youth and Adolescence. 2010;39(12):1387-1391. https://doi.org/10.1007/s10964-010-9510-0
3. Ramos P, Moreno-Maldonado C, Moreno C, Rivera F. The role of body image in internalizing mental health problems in Spanish adolescents: An analysis according to sex, age, and socioeconomic Status. Frontier in Psychology. 2019;10:1952. https://doi.org/10.3389/fpsyg.2019.01952
4. Dalhoff AW, Frausto HR, Romer G, Wessing I. Perceptive body image distortion in adolescent anorexia nervosa: Changes after treatment. Frontiers in Psychiatry. 2019;10:748. https://doi.org/10.3389/fpsyt.2019.00748
5. Kim S, So WY. Prevalence and sociodemographic trends of weight misperception in Korean adolescents. BMC Public Health. 2014;14:452. https://doi.org/10.1186/1471-2458-14-452
6. Shin A, Nam CM. Weight perception and its association with socio-demographic and health-related factors among Korean adolescents. BMC Public Health. 2015;15:1292. https://doi.org/10.1186/s12889-015-2624-2
7. Farah Wahida Z, Mohd Nasir MT, Hazizi AS. Physical activity, eating behaviour and body image perception among young adolescents in Kuantan, Pahang, Malaysia. Malaysian Journal of Nutrition. 2011;17(3):325-336
8. Chang FC, Lee CM, Chen PH, Chiu CH, Pan YC, Huang TF. Association of thin-ideal media exposure, body dissatisfaction and disordered eating behaviors among adolescents in Taiwan. Eating Behaviors. 2013;14(3):382-385. https://doi.org/10.1016/j.eatbeh.2013.05.002
9. Hosseini S, Padhy R. Body image distortion [Internet]. Treasure Island (FL): StatPearls Publishing. 2019 Sep 20 [cited 2022 May 17]. Available from: https://europepmc.org/article/nbk/nbk546582
10. Gaudio S, Quattrocchi CC. Neural basis of a multidimensional model of body image distortion in anorexia nervosa. Neuroscience Biobehavioral Reviews. 2012;36(8):1839-1847. https://doi.org/10.1016/j.neubiorev.2012.05.003
11. Perloff RM. Social media effects on young women's body image concerns: Theoretical perspectives and an agenda for re-

search. Sex Roles: A Jouranl of Research. 2014;71(11-12):363-377. https://doi.org/10.1007/s11199-014-0384-6
12. Jackson T, Chen H. Sociocultural influences on body image concerns of young Chinese males. Journal of Adolescent Research. 2008;23(2):154-171. https://doi.org/10.1177/0743558407310729
13. de Figueiredo CS, Sandre PC, Portugal LCL, Mázala-de-Oliveira T, da Silva Chagas L, Raony I, et al. COVID-19 pandemic impact on children and adolescents' mental health: Biological, environmental, and social factors. Progress in Neuro-Psychopharmacol and Biological Psychiatry. 2021;106:110171. https://doi.org/10.1016/j.pnpbp.2020.110171
14. Volkin S. The impact of the COVID-19 pandemic on adoelscents [Internet]. HUB:JOHNS HOPKINS UNIVERSITY. 2020 May 11 [cited 2022 Jun 1]. Available from: https://hub.jhu.edu/2020/05/11/covid-19-and-adolescents/
15. Deeker W. The Covid generation: the effects of the pandemic on youth mental health [Internet]. Horizon. 2022 [cited 2022 Jun 1]. Available from: https://ec.europa.eu/research-and-innovation/en/horizon-magazine/covid-generation-effects-pandemic-youth-mental-health
16. Zhu S, Zhuang Y, Ip P. Impacts on children and adolescents' lifestyle, social support and their association with negative impacts of the COVID-19 pandemic. International Journal of Environmental Research and Public Health. 2021;18(9):4780. https://doi.org/10.3390/ijerph18094780
17. Serra G, Scalzo L, Giuffre M, Ferrara P, Corsello G. Smartphone use and addiction during the coronavirus disease 2019 (COVID-19) pandemic: cohort study on 184 Italian children and adolescents. Italian Journal of Pediatrics. 2021;150
18. Vall-Roqué H, Andrés A, Saldaña C. The impact of COVID-19 lockdown on social network sites use, body image disturbances and self-esteem among adolescent and young women. Progress in Neuro-Psychopharmacol & Biological Psychiatry. 2021;110:110293. https://doi.org/10.1016/j.pnpbp.2021.110293
19. Clair R, Gordon M, Kroon M, Reilly C. The effects of social isolation on well-being and life satisfaction during pandemic. Humanity and Social Sciences Communications. 2021;8(1):1-6. https://doi.org/10.1057/s41599-021-00710-3
20. Johnson SU, Ulvenes PG, Øktedalen T, Hoffart A. Psychometric properties of the general anxiety disorder 7-Item (GAD-7) scale in a heterogeneous psychiatric sample. Frontiers in Psychology. 2019;10:1713. https://doi.org/10.3389/fpsyg.2019.01713
21. Rokach I, Maimon O. Decision tree. In: Maimon O, Rokach I, editors. Data mining and knowledge Discovery Handbook. Boston,MA: Springer; 2005. p. 165-192.
22. Türe M, Kurt I, Kürüm T. Analysis of intervariable relationships between major risk factors in the development of coronary artery disease: A classification tree approach. Anadolu Kardiyoloji Dergisi: AKD = The Anatolian Journal of Cardiology. 2007;7(2):140-145
23. Bae SM, Lee SA, Lee SH. Prediction by data mining, of suicide attempts in Korean adolescents: A national study. Neuropsychiatric Disease and Ttreatment. 2015;11:2367-2375. https://doi.org/10.2147/ndt.s91111
24. Ture M, Kurt I, Kurum AT, Ozdamr K. Comparing classification techniques for predicting essential hypertension. Expert Systems with Applications. 2005;29(3):583-588. https://doi.org/10.1016/j.eswa.2005.04.014
25. Hyun MY, Jung YE, Kim MD, Kwak YS, Hong SC, Bahk WM, et al. Factors associated with body image distortion in Korean adolescents. Neuropsychiatric Disease and Ttreatment. 2014;10:797-802. https://doi.org/10.2147/ndt.s63143
26. Lee J, Lee Y. The association of body image distortion with weight control behaviors, diet behaviors, physical activity, sadness, and suicidal ideation among Korean high school students: A cross-sectional study. BMC Public Health. 2016;16:39. https://doi.org/10.1186/s12889-016-2703-z
27. Talamayan KS, Springer AE, Kelder SH, Gorospe EC, Joye KA. Prevalence of overweight misperception and weight control behaviors among normal weight adolescents in the United States. The Scientific World Journal. 2006;6:365-373. https://doi.org/10.1100/tsw.2006.70
28. Kennedy MA, Templeton L, Gandhi A, Gorzalka BB. Asian body image satisfaction: Ethnic and gender differences across Chinese, Indo-Asian, and European Descent students. Eating Disorders,. 2004;12(4):321-336. https://doi.org/ 10.1080/10640260490521415
29. Perelman H, Buscemi J, Dougherty E, Haedt-Matt A. Body dissatisfaction in collegiate athletes: Differences between sex, sport type, and division level. Journal of Clinical Sport Psychology,. 2018;12(4):718-731. https://doi.org/10.1123/jcsp.2018-0018
30. Quittkat HL, Hartmann AS, Düsing R, Buhlmann U, Vocks S. Body dissatisfaction, importance of appearance, and body appreciation in men and women over the lifespan. Frontiers in Psychiatry,. 2019;10:864. https://doi.org/10.3389/fpsyt.2019.0086
31. Kye SH. The number on difficulty in daily life picked by teenagers in the Corona era is "body change". Yonhap News [In-

ternet]. 2022 Jun 26 [cited 2022 Jul 3]. Available from: https://www.yna.co.kr/view/AKR20220624144100530
32. Buote VM, Wilson AE, Strahan EJ, Gazzola SB, Papps F. Setting the bar: Divergent sociocultural norms for women's and men's ideal appearance in real-world contexts. Body Image,. 2011;8(4):322-334. https://doi.org/10.1016/j.bodyim.2011.06.002
33. Yun HJ. Effect of body image distortion on mental health in adolescents. Journal of Health Informatics and Statistics. 2018;43(3):191-199. https://doi.org/10.21032/jhis.2018.43.3.191
34. Choi EH, Mo MH. Body image according to body mass index of one area of male and female high school and college students. Journal of the Korea Academia-Industrial Cooperation Society. 2013;14(3):1313-1319. https://doi.org/10.5762/KAIS.2013.14.3.1313
35. Kim EH, Lee HK. The effect of body image distortion on smartphone dependence in female adolescents - Focused on the mediating effect of anxiety -. Youth Facilies and Environment. 2021;19(4):53-64
36. Emirtekin E, Balta S, Sural I, Kircaburun K, Griffiths MD, Billieux J. The role of childhood emotional maltreatment and body image dissatisfaction in problematic smartphone use among adolescents. Psychiatry Research. 2019;271:634-639. https://doi.org/10.1016/j.psychres.2018.12.059
37. Jo HW. Adolescents during COVID-19, "Severe body changes such as weight, increased stress". MBC News [Internet]. 2022 Jun 26. [cited 2022 Jul 1]. Available from: https://imnews.imbc.com/news/2022/society/article/6382189_35673.html
38. Choi SR. Excessive use of smartphones on the rise after the COVID-19 pandemic. YTN Science [Internet]. 2021 Oct 22. [cited 2022 May 31]. Available from: https://science.ytn.co.kr/program/view.php?mcd=0082&key=202110211758545677
39. Lee HL. The effect of physical activities on the growth indices in adolescents. The Journal of Pediatrics of Korean Medicine. 2015;29(2):16-25. https://doi.org/10.7778/jpkm.2015.29.2.016
40. Irvine KR, McCarty K, Pollet TV, Cornelissen KK, Tovée MJ, et al. Distorted body image influences body schema in individuals with negative bodily attitudes. Neuropsychologia. 2019;122:38-50. https://doi.org/10.1016/j.neuropsychologia.2018.11.015